To :

Specification of FUJITSU TFT-LCD module

FLC44SXC8V

Approval
Date :
By :

This Product is designed, developed and manufactured as contemplated for general use, including without limitation, general office use, personal use, household use, and ordinary industrial use, but is not designed, developed and manufactured as contemplated for use accompanying fatal risks or dangers that, unless extremely high safety is secured, could lead directly to death, personal injury, severe physical damage or other loss (hereinafter "High Safety Required Use"), including without limitation, nuclear reaction control in nuclear facility, aircraft flight control, air traffic control, mass transport control, medical life support system, missile launch control in weapon system. If customer's product possibly falls under the category of High Safety Required Use, please consult with our sales representatives in charge before such use. In addition, Fujitsu shall not be liable against the Customer and/or any third party for any claims or damages arising in connection with the High Safety Required Use of the Product without permission.

Specification No. : Tech Bes LCD-00028

Issue Date : Jan. 23, 2002

Issued by :

T. Naka
Director
LCD Design Dep.
LCD Technology Div.
LCD Group

FUJITSU LIMITED

REVISION HISTORY

	Revision	Date	Prepared	Checked		Approved	Summary
	01A	Jul.11.2000	T.Ito	K.Tanaka		T.Naka	1st issue
③	02A	Oct.16.2000	T.Ito	K.Tanaka		T.Naka	Change bezel Add data driver supplier
④	03B	Nov. 21.2001	T.Ito	K. Tanaka		T. Naka	Change CNT PCBA and CCFL.

DOCUMENT CONTROL SECTION

DATE

EDIT	DATE	DESIG.	CHECK	APPR.	DESCRIPTION
05	20020123	T.Ito		K.Tanaka	Revised P8
04	20011121	T.Ito		K.Tanaka	Add 03B,Revised P8,P17
03	20001016	T.Ito		K.Tanaka	Add 02A,Revised P14,P30
02	20000830	E.Nitto	T. Ito	K.Tanaka	Revised P30
DESIG.	20000711	T.Ito	CHECK		APPR. K.Tanaka

TITLE FLC44SXC8V

DRAW. NO. Tech Bes LCD-00028 CUST.

FUJITSU LIMITED

TABLE OF CONTENTS

1. APPLICATIONS 3

2. PRODUCT NAME AND MODEL NUMBER 3
   2-1.Product Name 3
   2-2.Model Number 3

3. OVERVIEW 3

4. CONFIGURATION 3

5. MECHANICAL SPECIFICATIONS 4

6. ABSOLUTE MAXIMUM RATING 5

7. RECOMMENDED OPERATING CONDITIONS 5

8. ELECTRICAL SPECIFICATIONS 6

9. OPTICAL SPECIFICATIONS 8

10. INTERFACE SPECIFICATIONS 12
   10-1.Signal Descriptions 12
   10-2.Color Data Assignment 13
   10-3.Input Signal Timing 14
   10-4.Correspondence between Data and Display Position 16
   10-5.Power Supply Sequence 16

11. BACK-LIGHT SPECIFICATIONS 17
   11-1.Pin configuration for Back-light 17
   11-2.CCFL 17
   11-3.Life 17

12. APPEARANCE SPECIFICATIONS 18
   12-1.Appearance 18
   12-2.Dot defects 18

13. ENVIRONMENTAL SPECIFICATIONS 20

14. INDICATIONS 21

15. PACKAGING 21
   15-1.Packing Specifications 21
   15-2.Packing Method 21

16. WARRANTY 26

17. PRECAUTIONS 26

18. OTHERS 29

DOCUMENT CONTROL SECTION

DATE

EDIT	DATE	DESIG.	CHECK	APPR.	DESCRIPTION
DESIG.			CHECK		APPR.

TITLE: FLC44SXC8V

DRAW. NO.: Tech Bes LCD-00028

CUST.

FUJITSU LIMITED

1. APPLICATION

This specification is applied to the 17.4-inch SXGA supported TFT-LCD module.

2. PRODUCT NAME AND MODEL NUMBER

2–1 Product Name : **LCD Module**

2–2 Model Name : **FLC44SXC8V**

3. OVERVIEW

This LCD module has a TFT active matrix type liquid crystal panel 1280x1024 pixels, and diagonal size of 44cm(17.4-inch). This LCD has a CMOS digital RGB interface and can display 16,777,216 colors.

Even and odd data are transmitted at the same timing in the interface, so data lines are 48. (R, G, B each 8 bit x2) The signal level of this interface is +3.3V CMOS level or 5V TTL level.

The power supply of this LCD module is +5V DC single.

This module has the characteristics for applying TCO'99.

4. CONFIGURATION

This LCD module consists of a color TFT-LCD panel that is mounted with TFT driver ICs, a cold-cathode fluorescent tube back-light.
The inverter for the back-light is not included.
Figure 4-1 shows a block diagram of this LCD module.

DOCUMENT CONTROL SECTION

DATE

EDIT	DATE	DESIG.	CHECK	APPR.	DESCRIPTION
DESIG.			CHECK		APPR.

TITLE FLC44SXC8V

DRAW. NO. Tech Bes LCD-00028 CUST.

FUJITSU LIMITED SHEET 3/

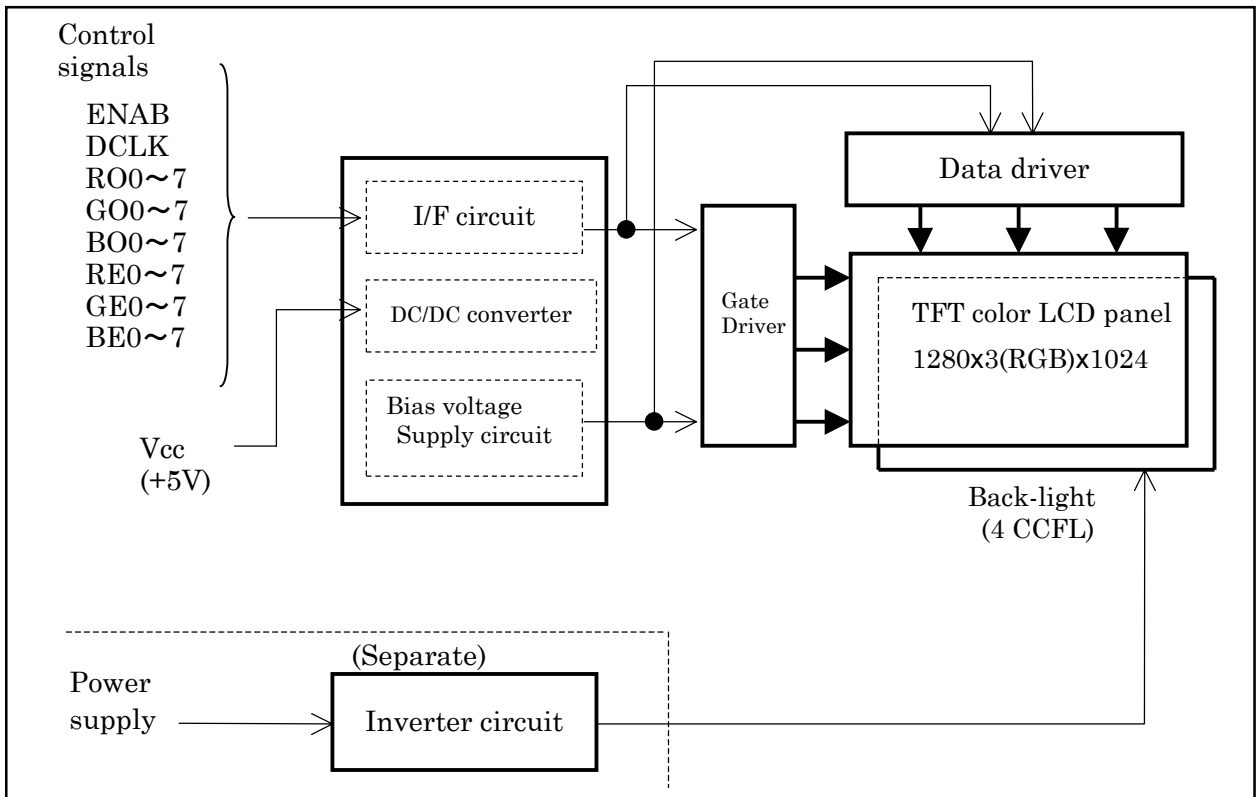

Figure 4-1 Block Diagram

5. MECHANICAL SPECIFICATIONS

Table 5-1 shows the mechanical specifications of this LCD module.

Table 5-1 Mechanical Specifications

Item	Specifications	Unit	Remark
Dimensions	404x322.5x21(TYP) (Excluding I/F connector and fixing parts)	mm	Edge type back-light is used. (Ø2.6 CCFLx4) Without inverter. For details on dimensions, see dimensional outline drawing. (at page 30,31,32:Figure 19-1,2,3) Excluding inverter.
Display Resolution	(1280x3)x1024	—	
Display Dot Area	345.6x276.48	mm	
Dot Pitch	(0.09x3)x0.27	mm	
Aspect Ratio	1:1	—	
Weight	2,300max	g	
FG-SG	Short circuit	—	

6. ABSOLUTE MAXIMUM RATING

Table 6-1 shows the absolute maximum rating of this LCD module.

Table 6-1 Absolute Maximum Rating

Item	Symbol	Condition	MIN.	TYP.	MAX.	Unit
Supply Voltage	V_{CC}	Ta=25°C	–0.3	—	6.0	V
Input Signal Voltage	V_{IN}	Ta=25°C	–0.3	—	V_{CC}+0.3	V

7. RECOMMENDED OPERATING CONDITIONS

Table 7-1 shows the recommended operating conditions of this LCD module.

Table 7-1 Recommended Operating Conditions

Item		Symbol	MIN.	TYP.	MAX.	Unit
Supply Voltage(Logic)		V_{CC}	4.75	—	5.25	V
Ripple Voltage	V_{CC}	V_{RP}	—	—	0.1	V

DOCUMENT CONTROL SECTION

DATE

EDIT	DATE	DESIG.	CHECK	APPR.	DESCRIPTION
DESIG.			CHECK		APPR.

TITLE FLC44SXC8V

DRAW. NO. Tech Bes LCD-00028

CUST.

FUJITSU LIMITED

8. ELECTRICAL SPECIFICATIONS

Table 8-1 shows the electrical specifications of this LCD module. Figure 8-1 shows the measurement circuit. Figure 8-2(A) shows the equivalent circuit of the logic signal input area. Figure 8-2(B) shows the equivalent circuit of the supply voltage Input area.

Table 8-1 Electrical Specifications

Item		Symbol	Condition	MIN.	TYP.	MAX.	Unit	Remark
Supply Current		I_{CC}	V_{CC}=+5.0±0.25V V_{SS}=0V DCLK=54MHz	—	850	1300	mA	*1
"H" Level Logic Input Voltage		V_{IH}		2.3	—	V_{CC}	V	
"L" Level Logic Input Voltage		V_{IL}		V_{SS}	—	0.9	V	
Leak Current(Logic Input)		I_{IL}		–5	—	+5	μA	
Supply Rush Current		I_{SCC}		—	—	2	A	*2
Supply Rush Current Duration(1.2A excess)		T_{SCC}		—	—	3	ms	
BACK LIGHT (*3)	CCFL Turn on Voltage	V_S	f_L=50kHz,Ta=25ºC	—	1300	1500	Vrms	
			f_L=50kHz,Ta=0ºC	—	—	1500		
	Lighting Voltage	V_L	f_L=50kHz I_L=6mA	—	700	—	Vrms	
	Lighting Frequency	f_L	V_L=700Vrms	40	50	60	kHz	
	Tube Current	I_L	f_L=50kHz V_L=700Vrms	4	6	7	mArms	*4

(*1) Typical current situation : Color bar pattern. Vcc=5.0V
Maximum current situation : 240th gray 2-pixel checker pattern. Vcc=4.75V
Without rush current.

(*2) These items prescribe the rush current for starting internal DC/DC.
Charging current to capacitors of Vcc is not prescribed.

(*3) Back-light specifications are valid when using a suitable inverter such as the FLCV-10

(*4) Tube current (I_L) shows the value of the current that is consumed at one lamp.
This LCD module has 4 lamps. Each 2 lamps are placed at upper side and lower side of the display.
2 lamps is connected in parallel. Each low voltage terminals are connected with 1 line cable to Back-light connecter.

DOCUMENT CONTROL SECTION

DATE

EDIT	DATE	DESIG.	CHECK	APPR.	DESCRIPTION
DESIG.			CHECK		APPR.

TITLE FLC44SXC8V

DRAW. NO. Tech Bes LCD-00028 CUST.

FUJITSU LIMITED SHEET 6/

Measurement circuit is based on Figure 8-1.

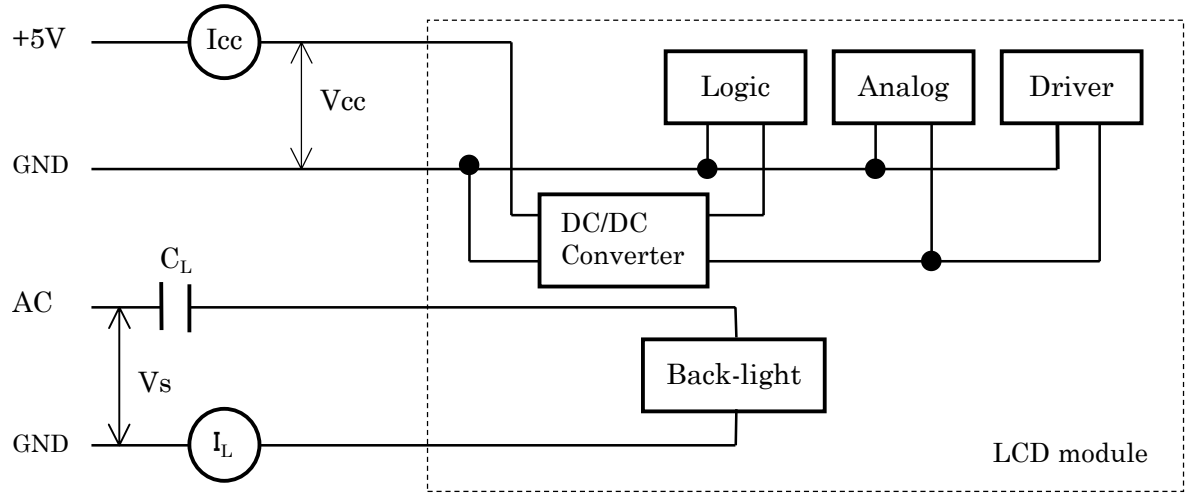

Figure 8-1 Measurement circuit

Input signals

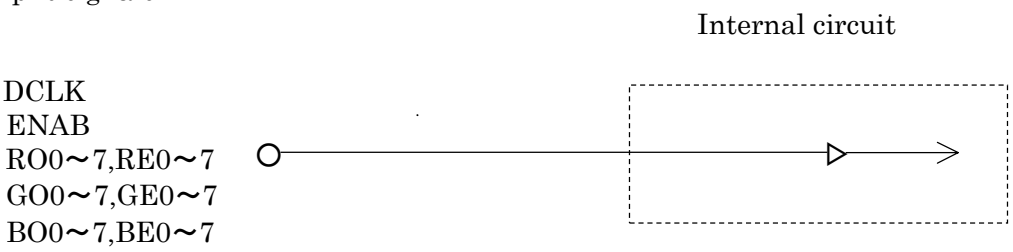

Figure 8-2(A) Equivalent circuit of logic signal Input

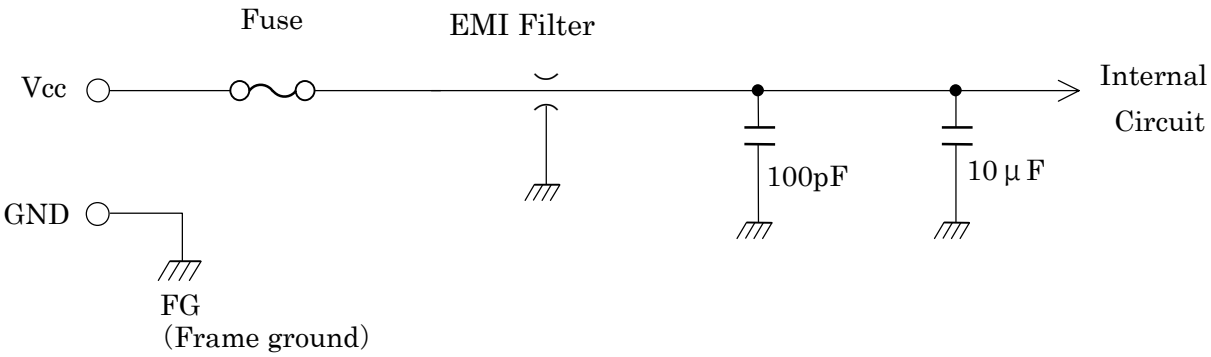

Fuse	F0603C2R50FWTRM or equivalent
EMI Filter	SGM20CIE332-2A or equivalent

Figure 8-2(B) Equivalent circuit of power supply

DOCUMENT CONTROL SECTION

DATE

EDIT	DATE	DESIG.	CHECK	APPR.	DESCRIPTION
DESIG.			CHECK		APPR.

TITLE FLC44SXC8V

DRAW. NO. Tech Bes LCD-00028 CUST.

FUJITSU LIMITED SHEET 7/

9. OPTICAL SPECIFICATIONS

Table 9-1 shows the optical specifications of this LCD module.

Table 9-1 Optical Specifications — Ta=25˚C

Item		Symbol	Condition		Specifications MIN.	Specifications TYP.	Specifications MAX.	Unit	Remark	Note
Visual Angle	Horizontal	$\theta_{L,R}$	CR ≧ 10	$\theta_{U,D}$=0 °	80	—	—	deg		(1)(2)(3)(5)(6)
	Vertical	$\theta_{U,D}$		$\theta_{L,R}$=0 °	80	—	—	deg		
Contrast Ratio		CR	$\theta_{L,R,U,D}$=0 °		210	400	—	—	White/ Black	(1)(2)(3)(5)
Response Time(ON) (B→W)		t_{on}	$\theta_{L,R,U,D}$=0 °	Ta=25˚C	—	15	30	ms		(1)(4)(5)
				Ta=0˚C	—	50	100	ms		
Response Time(OFF) (W→B)		t_{off}	$\theta_{L,R,U,D}$=0 °	Ta=25˚C	—	10	25	ms		
				Ta=0˚C	—	50	100	ms		
Brightness		I	$\theta_{L,R,U,D}$=0 ° V_{CC}=5V I_L=6mA		170	220		cd/m²	White *1	(1)(5)
Brightness Uniformity		△I			70	—	—	%		(1)(5)(7)
Chromaticity	W	x		④⑤	0.293 ~~0.295~~	0.313 ~~0.315~~	0.333 ~~0.335~~	—		(1)(5)
		y			0.309 ~~0.320~~	0.329 ~~0.340~~	0.349 ~~0.360~~	—		
	R G B	(x, y)		④⑤ Red	(0.609, 0.335) ~~(0.644,0.349)~~ Typ.					
				Green	(0.306, 0.565) ~~(0.295,0.596)~~ Typ.					
				Blue	(0.150, 0.120) ~~(0.150,0.131)~~ Typ.					
LCD Panel Type					TFT Color					
Display Mode					Normaly Black					
Wide Viewing Angle Technology					MVA					
Optimum Viewing Angle					— (symmentry)					(6)
Display Color					16,777,216 (8-bit color)					
Color of non-display area					Black					
Surface Treatment					Anti-glare (Haze value:25%, 2H)					

(*1) Value at 15～20 minutes after lighting on.

(Note) ・CS-1000 (MINOLTA Co., Ltd.) , BM-5A(Topcon) and the like should be used as a luminance colorimeter.
Field=1 ° , L=500mm
・Back-light current = 6mA, Dark room condition(1 lux or less)

DOCUMENT CONTROL SECTION

DATE

EDIT	DATE	DESIG.	CHECK	APPR.	DESCRIPTION
05	20020123				Change chromaticity value .
04	20011121				Change chromaticity value.

DESIG. CHECK APPR.

TITLE FLC44SXC8V

DRAW. NO. Tech Bes LCD-00028 CUST.

FUJITSU LIMITED SHEET 8 /

Note 1) Definition of Viewing Angle (1)

Based on Figure 9-1.

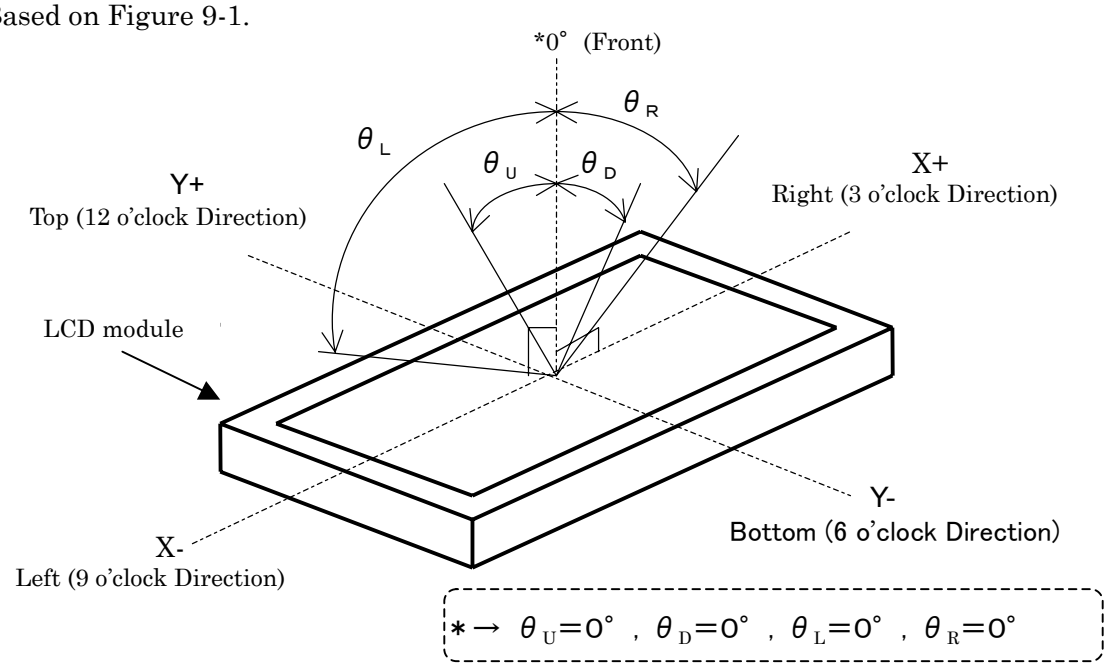

Figure 9-1 Definition of Viewing Angle (1)

Note 2) Definition of Viewing Angle (2)

Based on Figure 9-2.

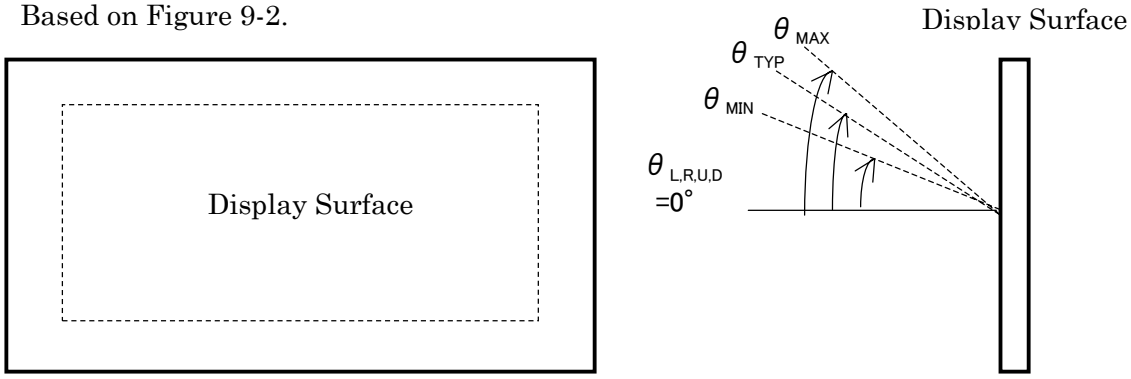

Figure 9-2 Definition of Viewing Angle (2)

Note 3) Definition of Contrast Ratio (CR)

Determined by Formula (1) based on Figure 9-3 Voltage-Brightness characteristics.

$$= \frac{L_W \text{ (Brightness at white)}}{L_B \text{ (Brightness at black)}} \quad \cdots\cdots(1)$$

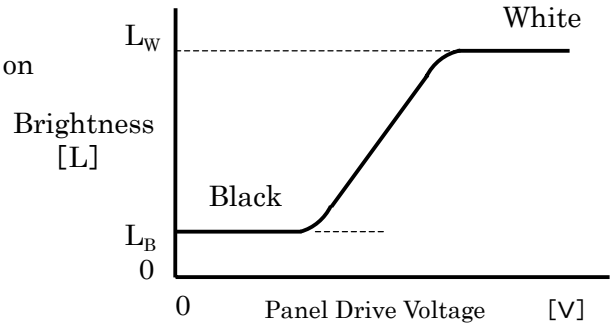

Figure 9-3 Voltage-Brightness Characteristics

DOCUMENT CONTROL SECTION

DATE

EDIT	DATE	DESIG.	CHECK	APPR.	DESCRIPTION
DESIG.			CHECK		APPR.

TITLE FLC44SXC8V

DRAW. NO. Tech Bes LCD-00028

CUST.

FUJITSU LIMITED

Note 4) Definition of Response Time

Based on Figure 9-4.

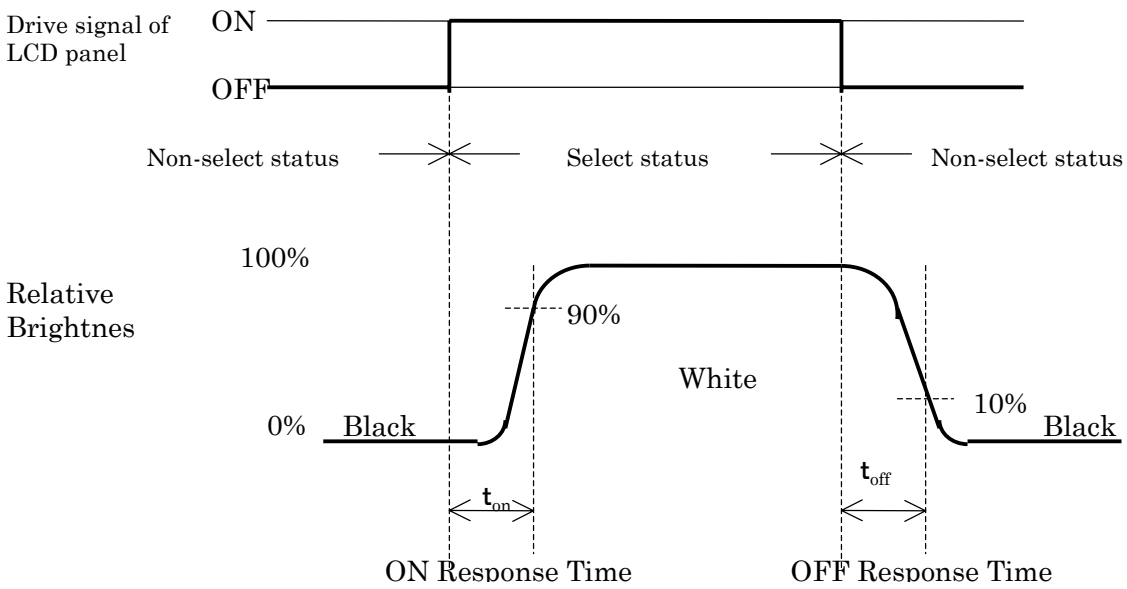

Figure 9-4 Definition of Response Time

Note 5) Contrast Ratio and Response Measurement System

Based on Figure 9-5.

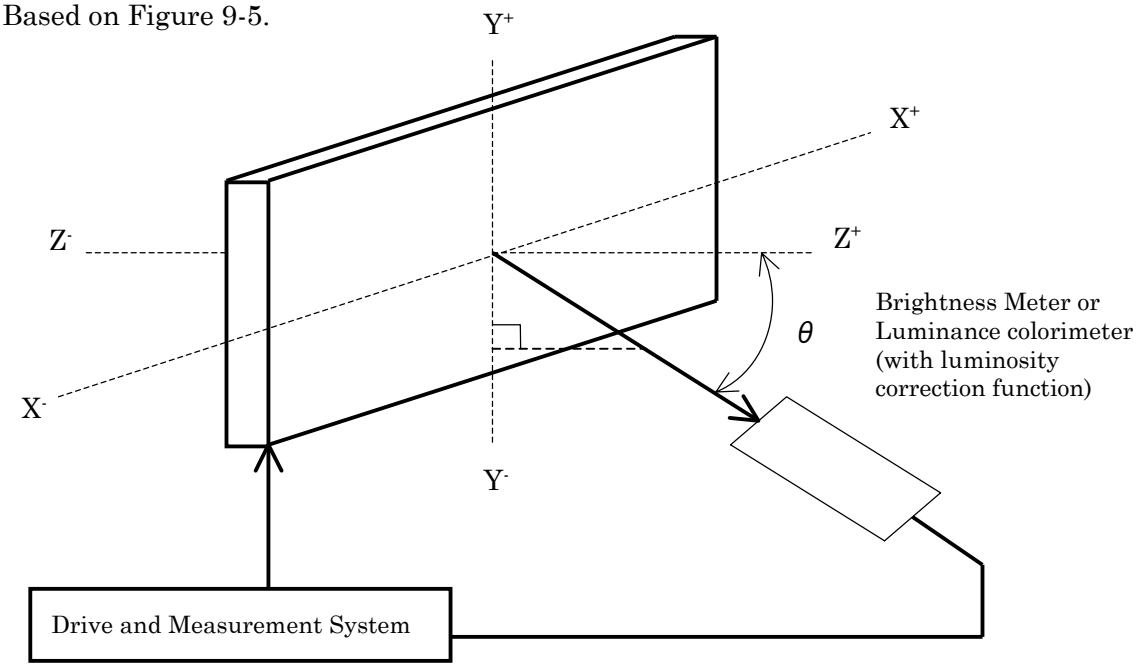

Figure 9-5 Contrast Ratio and Response Time Measurement System

DOCUMENT CONTROL SECTION

DATE

EDIT	DATE	DESIG.	CHECK	APPR.	DESCRIPTION
DESIG.			CHECK		APPR.

TITLE FLC44SXC8V

DRAW. NO. Tech Bes LCD-00028 CUST.

FUJITSU LIMITED SHEET 10/

Note 6) Definition of Optimum Viewing Angle

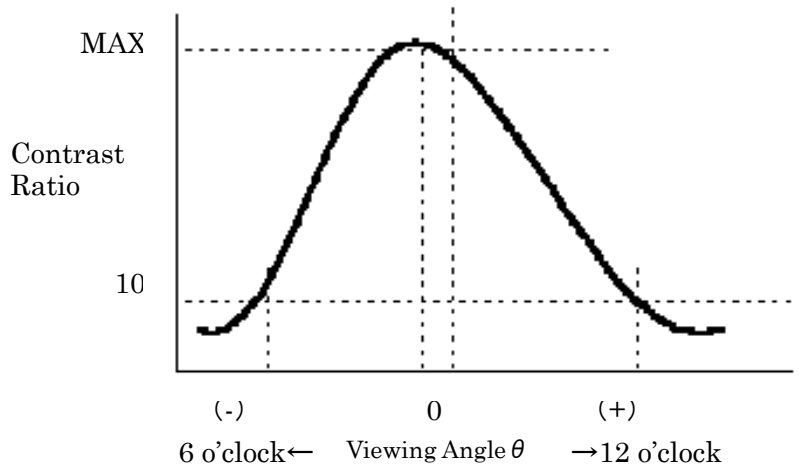

Figure 9-6 Definition of Viewing Angle

Note 7) Definition of Brightness Uniformity

Brightness uniformity is defined by the following formula.
Brightness (I1～I9) art measured at the following 9 points (①～⑨) on the display area that is shown in Figure 9-7.

$$\text{Brightness Uniformity } (\triangle L) = \frac{|\text{Min. In}|}{|\text{Max. In}|} \times 100\ (\%)\ ,\ n = 1 \text{ to } 9$$

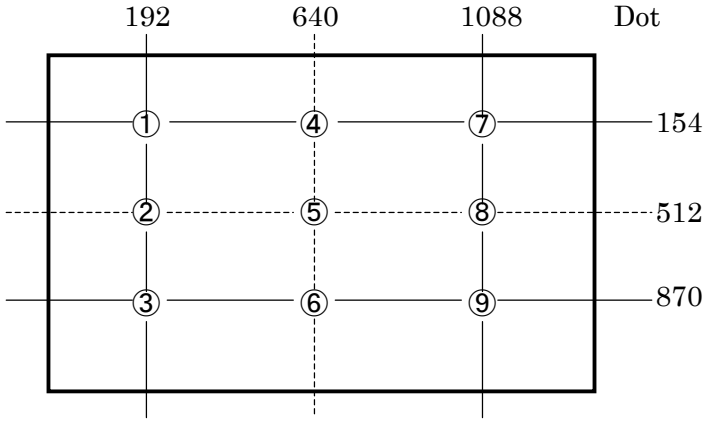

Note) Each measurement point (①～⑨) defines the center spot of view of Brightness Meter.
The tolerance of measurement position is±3mm.

Figure 9-7 Measurement Points

DOCUMENT CONTROL SECTION

DATE

EDIT	DATE	DESIG.	CHECK	APPR.	DESCRIPTION
DESIG.			CHECK		APPR.

TITLE FLC44SXC8V

DRAW. NO. Tech Bes LCD-00028 CUST.

FUJITSU LIMITED SHEET 11/

10. INTERFACE SPECIFICATIONS

10-1 Signal descriptions

Table 10-1 shows the description and configuration of interface signals (CN1).

Table 10-1 Interface signals (CN1)

Pin No.	Symbol	I/O	Function	Pin No.	Symbol	I/O	Function
1	GND	—	Ground	41	GND	—	Ground
2	RO0	I	Red odd data 0	42	GE0	I	Green even data 0
3	RO1	I	Red odd data 1	43	GE1	I	Green even data 1
4	RO2	I	Red odd data 2	44	GE2	I	Green even data 2
5	RO3	I	Red odd data 3	45	GE3	I	Green even data 3
6	GND	—	Ground	46	GND	—	Ground
7	RO4	I	Red odd data 4	47	GE4	I	Green even data 4
8	RO5	I	Red odd data 5	48	GE5	I	Green even data 5
9	RO6	I	Red odd data 6	49	GE6	I	Green even data 6
10	RO7	I	Red odd data 7	50	GE7	I	Green even data 7
11	GND	—	Ground	51	GND	—	Ground
12	GO0	I	Green odd data 0	52	BE0	I	Blue even data 0
13	GO1	I	Green odd data 1	53	BE1	I	Blue even data 1
14	GO2	I	Green odd data 2	54	BE2	I	Blue even data 2
15	GO3	I	Green odd data 3	55	BE3	I	Blue even data 3
16	GND	—	Ground	56	GND	—	Ground
17	GO4	I	Green odd data 4	57	BE4	I	Blue even data 4
18	GO5	I	Green odd data 5	58	BE5	I	Blue even data 5
19	GO6	I	Green odd data 6	59	BE6	I	Blue even data 6
20	GO7	I	Green odd data 7	60	BE7	I	Blue even data 7
21	GND	—	Ground	61	GND	—	Ground
22	BO0	I	Blue odd data 0	62	GND	—	Ground
23	BO1	I	Blue odd data 1	63	DCLK	I	Dot clock signal
24	BO2	I	Blue odd data 2	64	GND	—	Ground
25	BO3	I	Blue odd data 3	65	GND	—	Ground
26	GND	—	Ground	66	NC	—	No connection
27	BO4	I	Blue odd data 4	67	GND	—	Ground
28	BO5	I	Blue odd data 5	68	GND	—	Ground
29	BO6	I	Blue odd data 6	69	ENAB	I	Data enable signal
30	BO7	I	Blue odd data 7	70	NC	—	No connection
31	GND	—	Ground	71	NC	—	No connection
32	RE0	I	Red even data 0	72	NC	—	No connection
33	RE1	I	Red even data 1	73	VCC	—	+5V Power supply
34	RE2	I	Red even data 2	74	VCC	—	+5V Power supply
35	RE3	I	Red even data 3	75	VCC	—	+5V Power supply
36	GND	—	Ground	76	VCC	—	+5V Power supply
37	RE4	I	Red even data 4	77	TEST	—	Test pin *1
38	RE5	I	Red even data 5	78	TEST	—	Test pin *1
39	RE6	I	Red even data 6	79	TEST	—	Test pin *1
40	RE7	I	Red even data 7	80	GND	—	Ground

Connector : 52760-080X (Molex) User's connector : 53475-080X (Molex)

*1: Keep open. (Internal test use only.)

10-2 Color Data Assignment

Table 10-2 shows the Color Data Assignment.

Table 10-2 Color Data Assignment

Color			R Input data								G Input data								B Input data							
	Odd		R7	R6	R5	R4	R3	R2	R1	R0	G7	G6	G5	G4	G3	G2	G1	G0	B7	B6	B5	B4	B3	B2	B1	B0
	Even		R7	R6	R5	R4	R3	R2	R1	R0	G7	G6	G5	G4	G3	G2	G1	G0	B7	B6	B5	B4	B3	B2	B1	B0
Basic Color	Black		0	0	0	0	0	0	0	0	0	0	0	0	0	0	0	0	0	0	0	0	0	0	0	0
	Blue		0	0	0	0	0	0	0	0	0	0	0	0	0	0	0	0	1	1	1	1	1	1	1	1
	Green		0	0	0	0	0	0	0	0	1	1	1	1	1	1	1	1	0	0	0	0	0	0	0	0
	Cyan		0	0	0	0	0	0	0	0	1	1	1	1	1	1	1	1	1	1	1	1	1	1	1	1
	Red		1	1	1	1	1	1	1	1	0	0	0	0	0	0	0	0	0	0	0	0	0	0	0	0
	Magenta		1	1	1	1	1	1	1	1	0	0	0	0	0	0	0	0	1	1	1	1	1	1	1	1
	Yellow		1	1	1	1	1	1	1	1	1	1	1	1	1	1	1	1	0	0	0	0	0	0	0	0
	White		1	1	1	1	1	1	1	1	1	1	1	1	1	1	1	1	1	1	1	1	1	1	1	1
Red	Black	0	0	0	0	0	0	0	0	0	0	0	0	0	0	0	0	0	0	0	0	0	0	0	0	0
	⇧	1	0	0	0	0	0	0	0	1	0	0	0	0	0	0	0	0	0	0	0	0	0	0	0	0
	⇧	:	:	:	:	:	:	:	:	:	:	:	:	:	:	:	:	:	:	:	:	:	:	:	:	:
		:	:	:	:	:	:	:	:	:	:	:	:	:	:	:	:	:	:	:	:	:	:	:	:	:
	⇩	:	:	:	:	:	:	:	:	:	:	:	:	:	:	:	:	:	:	:	:	:	:	:	:	:
	Brighter	253	1	1	1	1	1	1	0	1	0	0	0	0	0	0	0	0	0	0	0	0	0	0	0	0
	⇩	254	1	1	1	1	1	1	1	0	0	0	0	0	0	0	0	0	0	0	0	0	0	0	0	0
	Red	255	1	1	1	1	1	1	1	1	0	0	0	0	0	0	0	0	0	0	0	0	0	0	0	0
Green	Black	0	0	0	0	0	0	0	0	0	0	0	0	0	0	0	0	0	0	0	0	0	0	0	0	0
	⇧	1	0	0	0	0	0	0	0	0	0	0	0	0	0	0	0	1	0	0	0	0	0	0	0	0
	⇧	:	:	:	:	:	:	:	:	:	:	:	:	:	:	:	:	:	:	:	:	:	:	:	:	:
		:	:	:	:	:	:	:	:	:	:	:	:	:	:	:	:	:	:	:	:	:	:	:	:	:
	⇩	:	:	:	:	:	:	:	:	:	:	:	:	:	:	:	:	:	:	:	:	:	:	:	:	:
	Brighter	253	0	0	0	0	0	0	0	0	1	1	1	1	1	1	0	1	0	0	0	0	0	0	0	0
	⇩	254	0	0	0	0	0	0	0	0	1	1	1	1	1	1	1	0	0	0	0	0	0	0	0	0
	Green	255	0	0	0	0	0	0	0	0	1	1	1	1	1	1	1	1	0	0	0	0	0	0	0	0
Blue	Black	0	0	0	0	0	0	0	0	0	0	0	0	0	0	0	0	0	0	0	0	0	0	0	0	0
	⇧	1	0	0	0	0	0	0	0	0	0	0	0	0	0	0	0	0	0	0	0	0	0	0	0	1
	⇧	:	:	:	:	:	:	:	:	:	:	:	:	:	:	:	:	:	:	:	:	:	:	:	:	:
		:	:	:	:	:	:	:	:	:	:	:	:	:	:	:	:	:	:	:	:	:	:	:	:	:
	⇩	:	:	:	:	:	:	:	:	:	:	:	:	:	:	:	:	:	:	:	:	:	:	:	:	:
	Brighter	253	0	0	0	0	0	0	0	0	0	0	0	0	0	0	0	0	1	1	1	1	1	1	0	1
	⇩	254	0	0	0	0	0	0	0	0	0	0	0	0	0	0	0	0	1	1	1	1	1	1	1	0
	Blue	255	0	0	0	0	0	0	0	0	0	0	0	0	0	0	0	0	1	1	1	1	1	1	1	1

Note.1) Definition of gray scale:Color (n)…"n" indicates gray scale level.
Larger number means brighter level.
Note.2) Data; 1:High, 0:Low

Note 3) Color data consist of 8 bit red, green and blue data of odd and even number pixel data. Total data number is 48 signals. This module is able to display 16,777,216 colors because each red, green and blue data is controlled independently.

DOCUMENT CONTROL SECTION

DATE

EDIT	DATE	DESIG.	CHECK	APPR.	DESCRIPTION
DESIG.			CHECK		APPR.

TITLE FLC44SXC8V

DRAW. NO. Tech Bes LCD-00028 CUST.

FUJITSU LIMITED SHEET 13/

10-3 Input Signal Timing

Table 10-3 and Figure 10-1 shows the Input Signal Timing.

Table 10-3 Timing Characteristics (Ta=0~50˚C, Vcc=5±0.25V)

Item		Symbol	Min.	Typ.	Max.	Unit	Remark
DCLK signal (Clock)	Period	Tc	17.9	18.5	25.0	ns	
	Frequency	1/Tc	40	54	56	MHz	
	Duty	Tch/Tc	45	50	55	%	
	High time	TclkH	5.0	—	—	ns	
	Low time	TclkL	5.0	—	—	ns	
	Rise time	Tclkr	—	—	4.0	ns	
	Fall time	Tclkf	—	—	4.0	ns	
DCLK-Data Timing	Setup time	Tset	3	—	—	ns	
	Hold time	Thold	5	—	—	ns	
ENAB signal	Horizontal Period	Th	710*1	844	887*1	DCLK	
	Hor. Period	Th	14.0	15.6	—	µs	
	Hor. Display period	Thd	640	640	640	DCLK	*2
	Vertical Period	Tv	1028*1	1066	1088*1	Th	16.67ms
	Ver. Frequency	1/Tv	50	60	69	Hz	
	Ver. Display period	Tvd	1024	1024	1024	Th	*2
	Data-ENAB timing	Tdn	—	0	—	DCLK	*3

*1)• horizontal display position is specified by the rise of ENAB.
The data latched at falling edge of DCLK after rise of ENAB is displayed at the left edge of the display area.
• Vertical display position is specified by the rise of ENAB after low level continuation over 2048 DCLK.
The data latched at the rise of ENAB is displayed at the top line of the display area.

③ ~~*2)• If the "High" level period of ENAB is less than 640 DCLK or the number of ENAB In a frame period(Tv) is less than 1024, black color is displayed at the rest of the display area.~~

*3)• If ENAB does not synchronize with the effective display data, the display position does not fit to the display area.

DOCUMENT CONTROL SECTION

DATE

EDIT	DATE	DESIG.	CHECK	APPR.	DESCRIPTION
03	20001016				③ correction.

DESIG. CHECK APPR.

TITLE FLC44SXC8V

DRAW. NO. Tech Bes LCD-00028 CUST.

FUJITSU LIMITED SHEET 14/

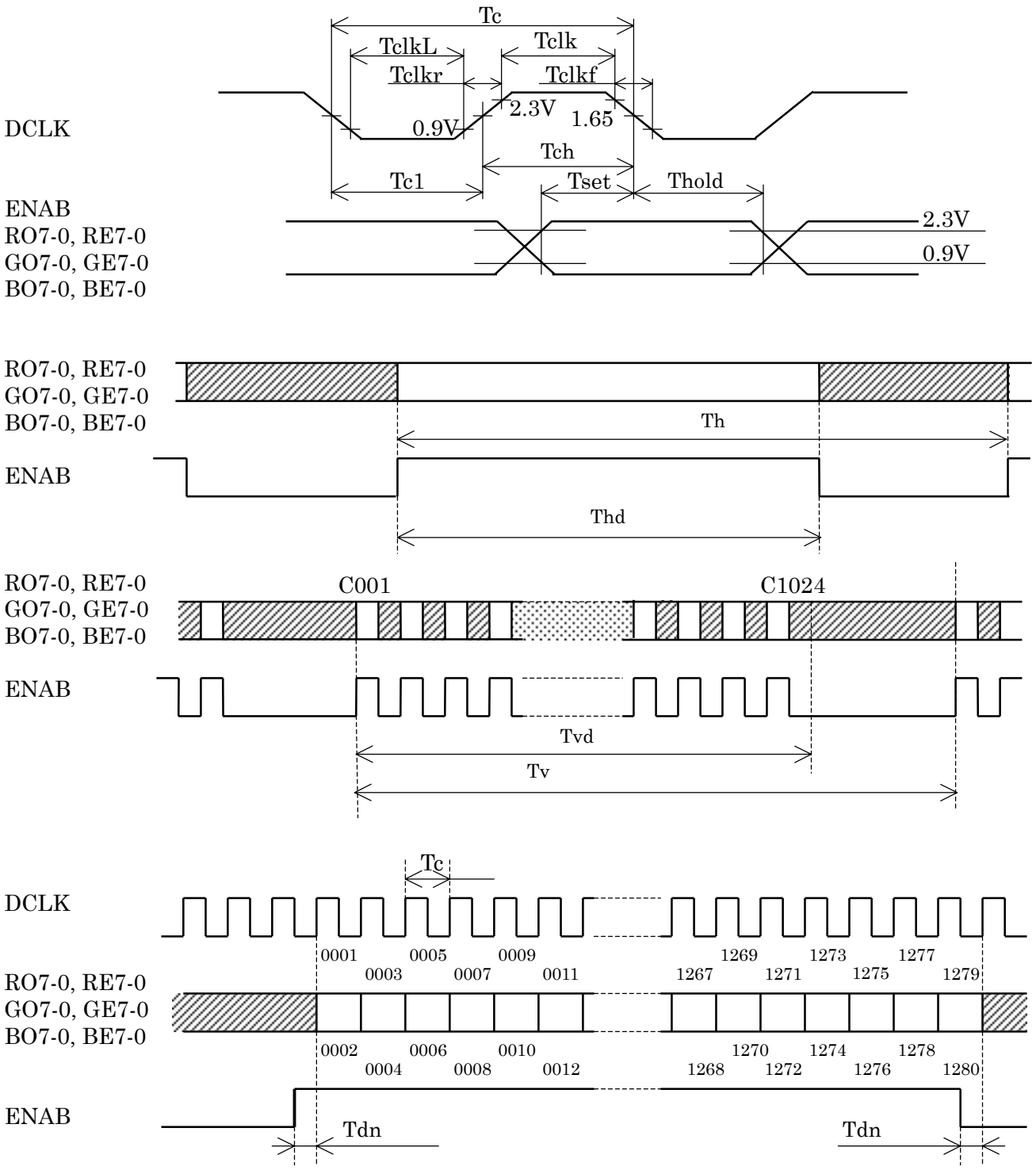

Figure 10-1 Input Signal Timing Chart

DOCUMENT CONTROL SECTION

DATE

EDIT	DATE	DESIG.	CHECK	APPR.	DESCRIPTION
DESIG.			CHECK		APPR.

TITLE FLC44SXC8V

DRAW. NO. Tech Bes LCD-00028

CUST.

FUJITSU LIMITED

SHEET 15/

10-4 Correspondence between Data and Display Position

Figure 10-2 shows the Correspondence between Data and Display Position.

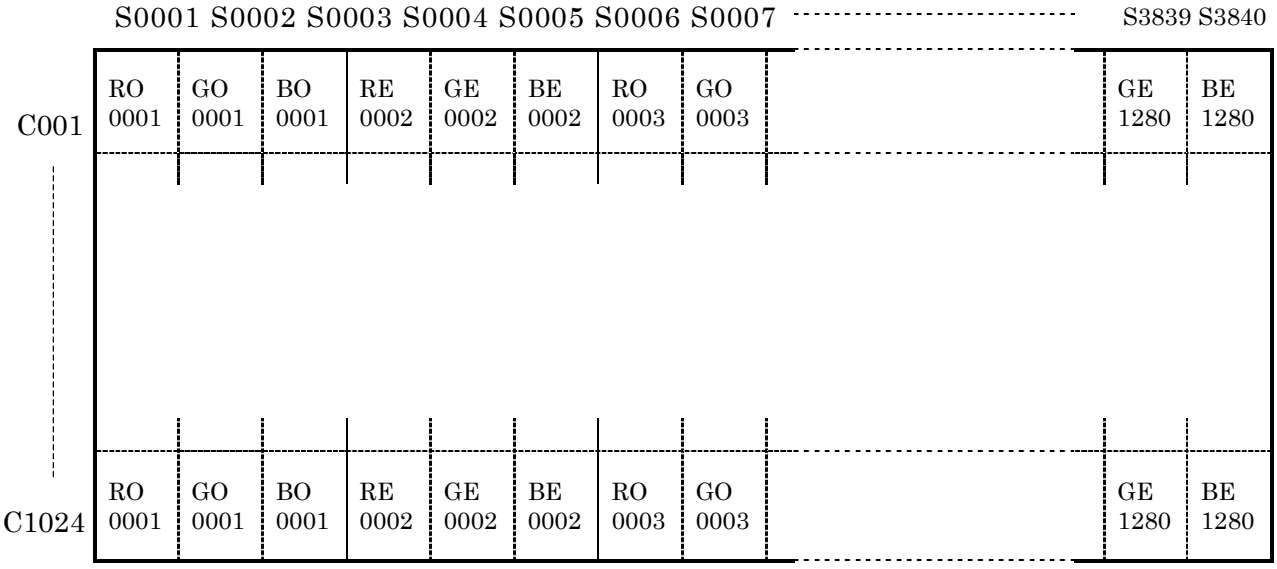

Figure 10-2 Correspondence Data and Display Position

10-5 Power Supply Sequence

The sequence of input signals and On/Off of the power supply of this LCD module should be in the specification shown in Figure 10-3 to prevent latch-up of the driver ICs and DC driving of the LCD panel.

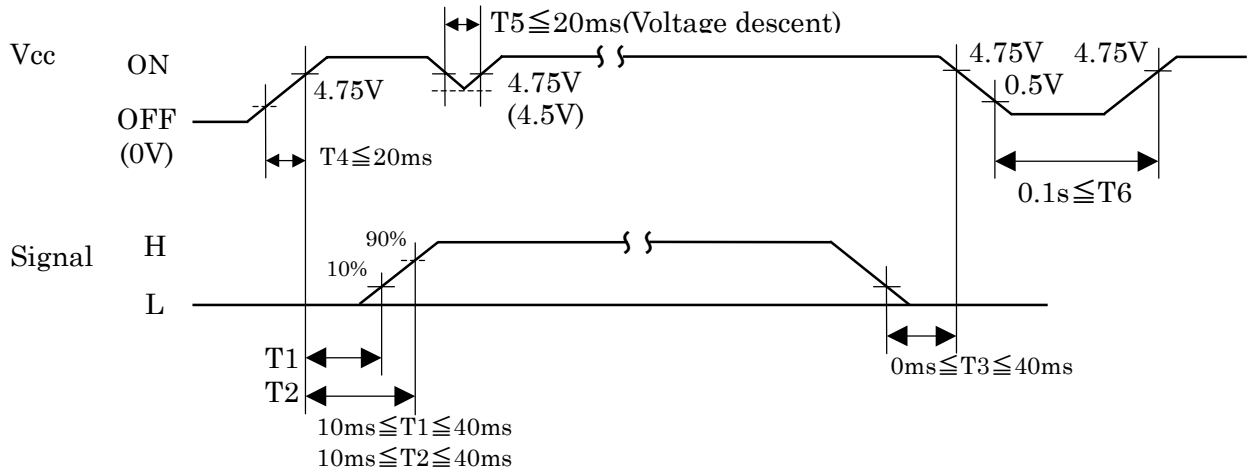

Figure 10-3 Power Supply Sequence

DOCUMENT CONTROL SECTION

DATE

EDIT	DATE	DESIG.	CHECK	APPR.	DESCRIPTION
DESIG.			CHECK		APPR.

TITLE FLC44SXC8V

DRAW. NO. Tech Bes LCD-00028

CUST.

FUJITSU LIMITED

SHEET 16/

11. BACK-LIGHT SPECIFICATIONS

11-1 Pin configuration for Back-light

Table 11-1 and 11-2 shows the description and Pin assignment of the connectors (CN-A and B) for the Back-light of this LCD module.

Table 11-1 Pin Assignment of CN-A

Pin №	Signal	Function	Cable Color ④
1	V_L1	Power supply for CCFL 1	~~Pink~~ Blue
2	V_L2	Power supply for CCFL 2	~~Pink~~ Blue
3	NC	—	—
4	GND	Ground (for $V_L1,2$)	White

Table 11-2 Pin Assignment of CN-B

Pin №	Signal	Function	Cable Color ④
1	V_L3	Power supply for CCFL 3	~~Pink~~ Blue
2	V_L4	Power supply for CCFL 4	~~Pink~~ Blue
3	NC	—	—
4	GND	Ground (for $V_L3,4$)	White

Connector : Housing : BHR-04VS-1
Contact : SBH-001T-P0.5
User's Connector : Post with base: SM04(4.0)B-BHS-1-TB
Supplier : Japan Solderless Terminal Trading Company LTD. (J.S.T.)

11-2 CCFL

Supplier: KOWA ELECTRIC CO.LTD Part No. ~~KFN8367F3223150~~
④ SS26E3670E8550C3223150

11-3 Life

The life of the back-light is a minimum of 50,000 hours at the following conditions.

(1) Working conditions

①Ambient temperature: 25±5℃
②Tube current (I_L) : (6mA or less)

(2) Definition of life

①Brightness becomes 50% or less than the minimum brightness value shown in Table 9-1.
②The lamp cannot be lit by the minimum value of the breakdown voltage(1500Vrms) shown in Table 8-1.
③Flashing.

11-4 Lamp assembly set (for replacement)

Lamp assembly set(with charge)is prepared for replacing old lamp to new one.
This set consists of a upper lamp assembly and a lower lamp assembly.

Type number : ~~FLCL-17~~ (for upper and lower)
④ FLCL-22

DOCUMENT CONTROL SECTION
DATE

EDIT	DATE	DESIG.	CHECK	APPR.	DESCRIPTION
04	20011121				Change CCFL spec.

DESIG. CHECK APPR.

TITLE FLC44SXC8V
DRAW. NO. Tech Bes LCD-00028
CUST.

FUJITSU LIMITED SHEET 17/

12. APPEARANCE SPECIFICATIONS

Length:L [mm]
Width:W[mm]
Average diameter:D[mm]

12-1 Appearance

No.	Item		Judgement method and standard	Remarks
1	Foreign Particle	Black particle	0.5 >D N≦4	Recognized in the cell with lighting
		Fiber	3.0>L N≦4	
2	Scratch	Scratch on polarizer film	10.0>L N≦6	
3	Nick	Nick on polarezer film	0.5>D N≦6	

Note

・Foreign particle and scratch that do not affect display image, such as foreign article between glass and polarizer film out of the display area, scratch on metal vessel, back-light module or polarizer film out of the display area, etc. are not counted.

・These items apply to defects in the cell when the back-light is on, and defects on the surface of polarizer film inside the display area.

・Visually inspect appearance with keeping your eyes 35cm or more from the panel, using one 20W fluorescent light illumination at 50cm above the work table. At this time, the illuminance in the vertical direction to the fluorescent light is 400 to 600lux (reference value).

12-2 Dot defects (Bright spots, Dark spots)

12-2-1 Zone

Inside display dot area (345.6 X 276.48mm)
Display dot area means active area.
One pixel consists of 3 dots (red, green and blue).

12-2-2 Bright spots

(1) Bright spots classification (based on brightness samples)
・Red or Green spot is High Bright spot.
・Blue spot is Low Bright spot.
・Spots not seen in 50% gray pattern are ignored.

(2) Defects of color filter
・Larger than one half of a dot
・Same or smaller than one half of a dot

(3) Defects of chrome mask
・Larger than Ø50μm ---------- High Bright spot
・Same or smaller than Ø50μm ---------- not counted

DOCUMENT CONTROL SECTION
DATE

EDIT	DATE	DESIG.	CHECK	APPR.	DESCRIPTION
DESIG.			CHECK		APPR.

TITLE FLC44SXC8V
DRAW. NO. Tech Bes LCD-00028
CUST.
FUJITSU LIMITED

12-2-3 Number of luminescent spot standard

Item	Entire Screen	
Brightness classification	High Bright Spots	High and Low Bright Spots
Number of defects	9 or less	15 or less

NOTES:

1. Display should be all black when luminescent spot is counted.
2. Number of high Bright spots of green (G) is up to 7.
3. Number of two low Bright spot connections is up to 7.
4. Number of three Bright spot connections and two high Bright spot connections is 0.
5. Number of high Bright spot and low Bright spot connections is up to 4.

12-2-4 Distance between Bright spots

・High Bright spots R and G ---------- 15mm or more

・High Bright spots and low Bright spot ---------- 5mm or more
(Except one or two of two bright spot connections)

12-2-5 Number of Dark spots standard

Item	Entire Screen
Number of defects	16 or less (When display is all white)

NOTES:

1. Display should be all white when dark spot is counted.
2. Number of two dark spot connections is up to 5.
3. Distance between defects is 5mm or more.
4. If dark spot is smaller than one dot size, convert with following role and sum up.

(a) A < 1/3 : Not count.
(Only one of 4 dark connection is allowed.)

(b) 1/3 ≦ A < 2/3 : Considered as 0.5 dot.

(c) 2/3 ≦ A : Considered as 1 dot.

(A= Dark spot size/dot size)

DOCUMENT CONTROL SECTION

DATE

EDIT	DATE	DESIG.	CHECK	APPR.	DESCRIPTION
DESIG.			CHECK		APPR.

TITLE FLC44SXC8V

DRAW. NO. Tech Bes LCD-00028

CUST.

FUJITSU LIMITED

13. ENVIRONMENTAL SPECIFICATIONS

Table 13-1 show the environmental specifications.

Table 13-1 Environmental specifications

Item	Condition		Remark
Temperature	Operation	0~50ºC	Temperature on surface of LCD panel (display area.)
	Storage	–20~60ºC	
Humidity	Operation	20~85%RH	Maximum wet-bulb temperature should not exceed 29ºC. No condensation.
	Storage	5~85%RH	
Vibration	Non-operation	10~500Hz, 1octave/20minute, 2G, 1.5mm max, 1hour each X, Y and Z directions	For single module without package.
Shock	Non-operation	30G, 6ms, 1time each ±X, ±Y and ±Z directions.	

NOTE: Table 13-2 and Figure 13-1 show the shock resistance standard when module is packaged.

Table 13-2 Shock resistance standard when module is packaged

Dropping location	Dropping height	Count
A~J	60cm	1 time

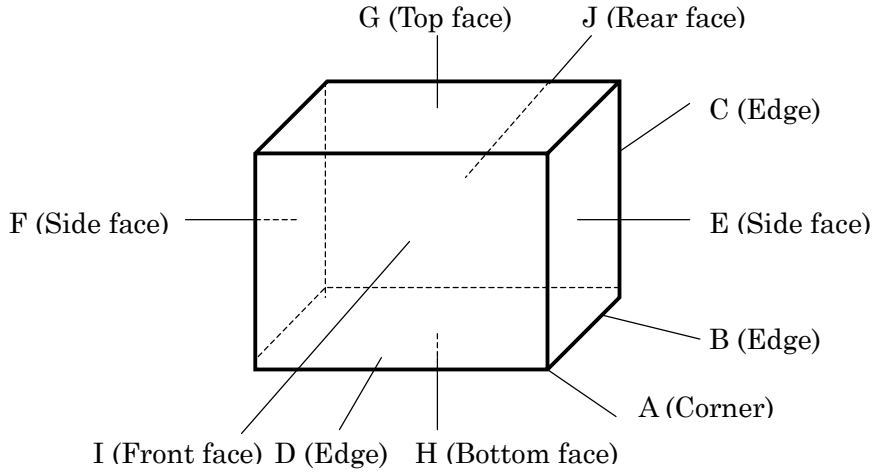

Figure 13-1 Direction to apply shock to package

DOCUMENT CONTROL SECTION

DATE

EDIT	DATE	DESIG.	CHECK	APPR.	DESCRIPTION
DESIG.			CHECK		APPR.

TITLE FLC44SXC8V

DRAW. NO. Tech Bes LCD-00028 CUST.

FUJITSU LIMITED SHEET 20/

14. INDICATIONS

This module has the following indications.

(1) Product name : **LCD unit**

(2) Model Number : **FLC44SXC8V**

(3) Product Drawing Number : **NA19020-C151**

(4) Manufacturing Number : **0 7 0 0 0 0 1**

- Serial number (To be reset every month on 1st.)
- Manufacturing month (Oct. = X, Nov. =Y, Dec. =Z)
- Last digit of manufacturing year.

(5) Version number : **01A** (Example)
-1st 2 digits "01" means operational version.
-3rd alphabet means functional version.

(6) Manufacturer Country Name :

(7) Company Name : **FUJITSU LIMITED**

(8) Disposal method of cold-cathode tubes. (See Figure 14-1)

(9) Caution when changing cold-cathode tubes. (See Figure 14-2)

・THIS TFT COLOR LCD CONTAINS COLD CATHODE FLUORESCENT LAMPS. PLEASE FOLLOW LOCAL ORDINANCES OR REGULATIONS FOR ITS DISPOSAL.
・当該液晶ディスプレイユニットには蛍光管が組み込まれていますので、地方自治体の条例または規則に従って廃棄して下さい。

Figure 14-1

・WHEN CHANGING COLD CATHODE FLUORESCENT LAMPS, FOLLOW OPERATING SPECIFICATIONS. ESPECIALLY BE CAREFUL BOUT THE LAMPS SIDE-EDGE.
・蛍光管の交換は作業仕様書に従って行って下さい。特に蛍光管ホルダ側面のエッジに気をつけて下さい。

Figure 14-2

15. PACKAGING

Separately specified in packaging specifications.

15-1 Packing specifications

(1) 5 LCD modules/1package.

(2) Weight:approximately 13kg/1package.

(3) Outline dimensions:533mm (W)x308mm (D)x 468mm (H)

15-2 Packing method

Figure 15-1, 2 show the packing method.

DOCUMENT CONTROL SECTION

DATE

EDIT	DATE	DESIG.	CHECK	APPR.	DESCRIPTION
DESIG.			CHECK		APPR.

TITLE FLC44SXC8V

DRAW. NO. Tech Bes LCD-00028

CUST.

FUJITSU LIMITED

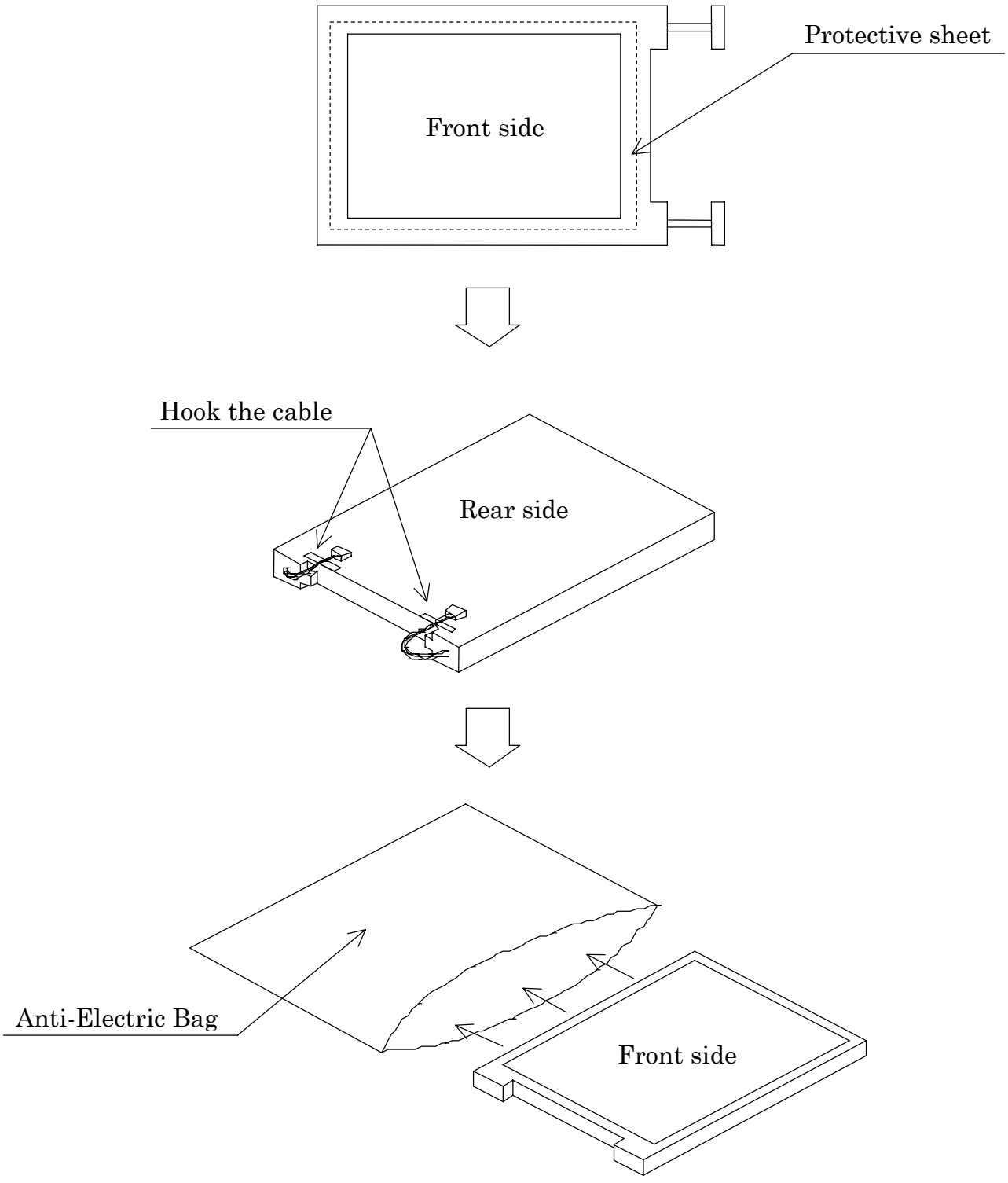

Fig.15-2 (a) Packaging Method

EDIT	DATE	DESIG.	CHECK	APPR.	DESCRIPTION								
DESIG.			CHECK				APPR.						

TITLE FLC44SXC8V

DRAW. NO. Tech Bes LCD-00028

CUST.

FUJITSU LIMITED

SHEET 22/

DOCUMENT CONTROL SECTION

DATE

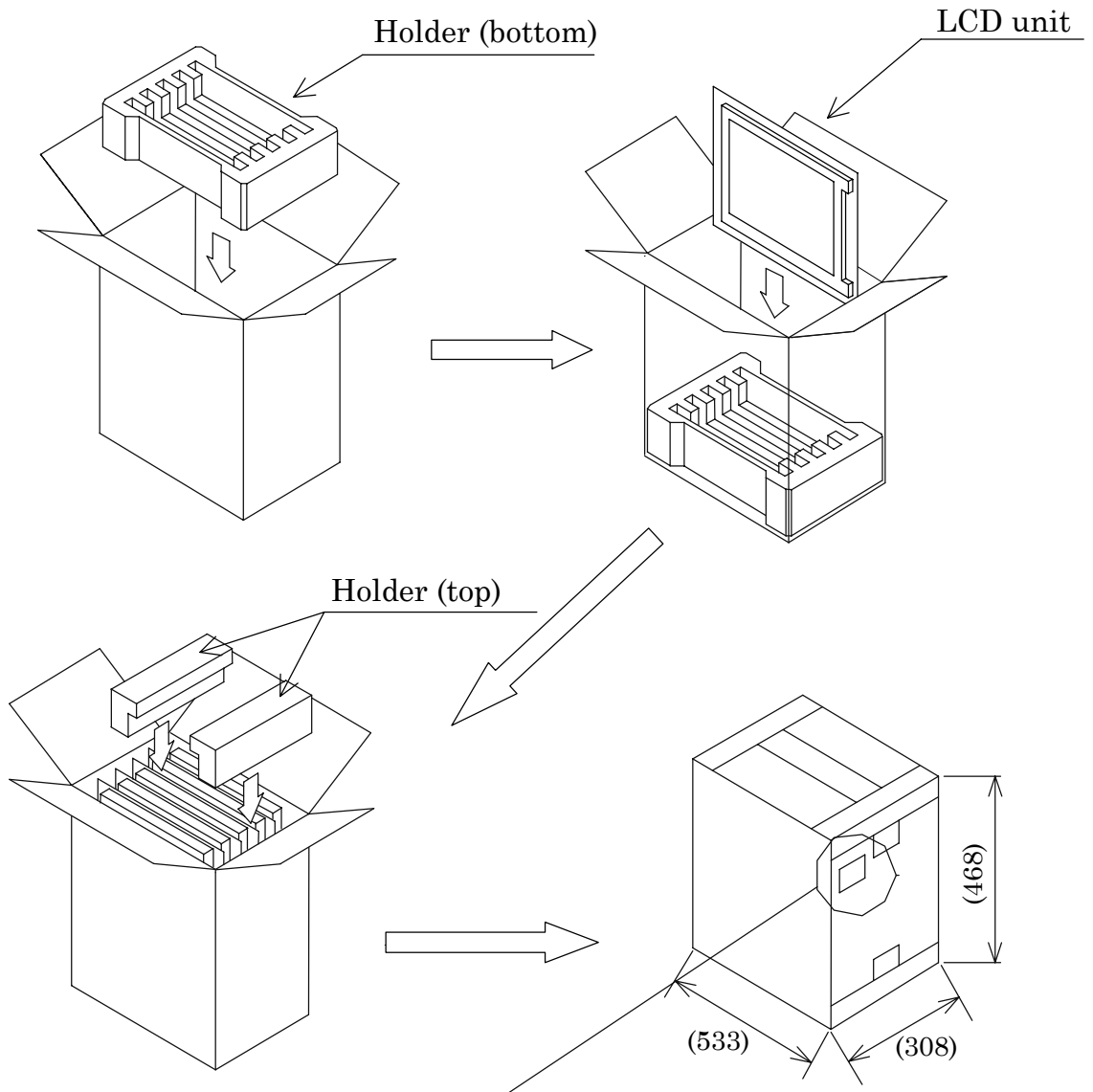

Label (example)

型 格 (TYPE)	FLC44SXC8V	数 量 (QTY.)	5
図 番 (DRWG. NO.)	NA19020-C151	版 数 (REV. NO.)	01A

0700001
0700002
0700003
0700004
0700005

Bar code

MADE IN JAPAN

- Taping
  Top : H or I method
  Bottom : H method
- Top and bottom holders should be anti-electrostatic type.

Fig.15-2 (b) Packaging Method

DOCUMENT CONTROL SECTION

DATE

EDIT	DATE	DESIG.	CHECK	APPR.	DESCRIPTION
DESIG.			CHECK		APPR.

TITLE FLC44SXC8V

DRAW. NO. Tech Bes LCD-00028

CUST.

FUJITSU LIMITED

SHEET 23/

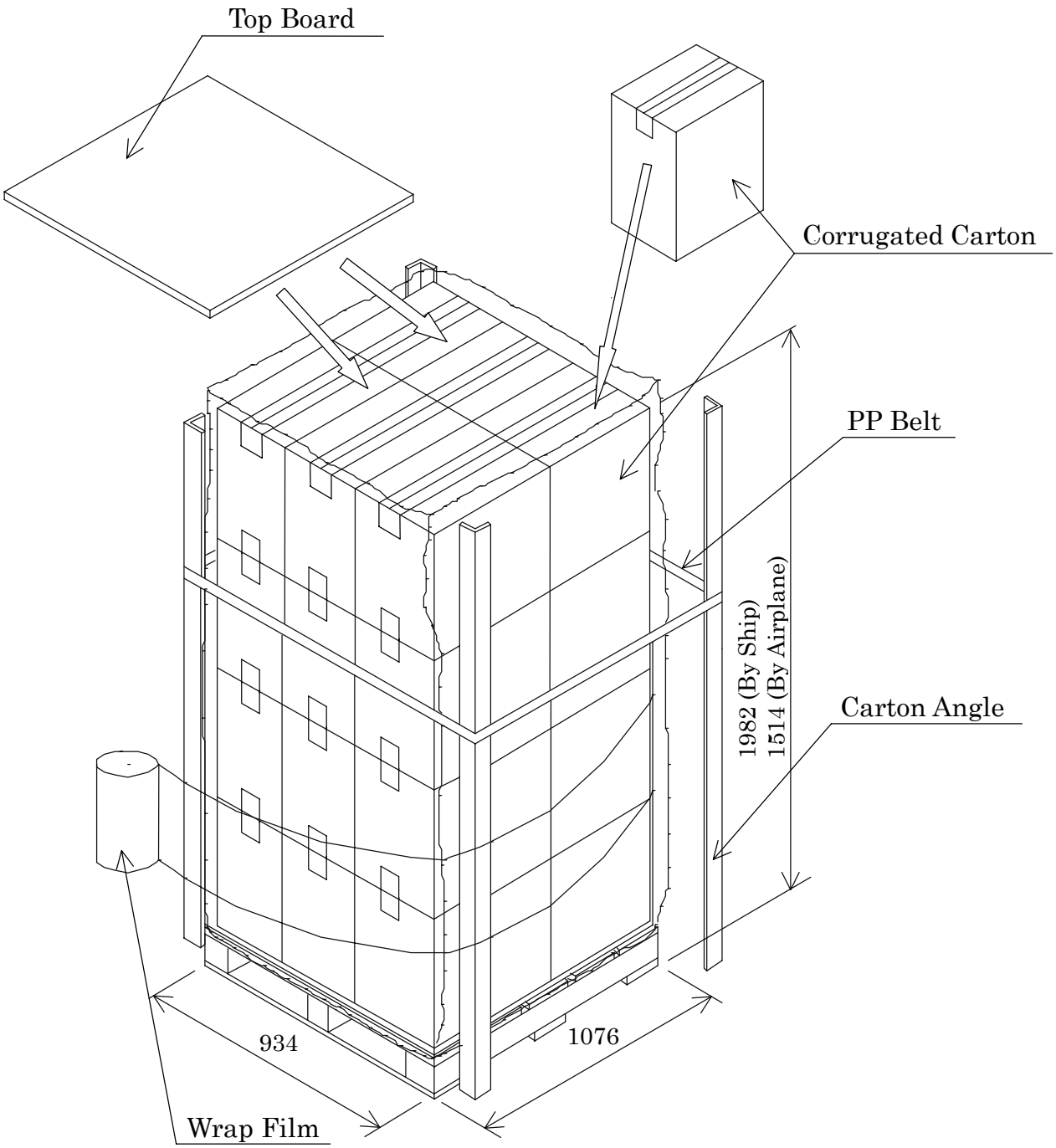

Up and Down : 3 times wrap
Middle : 2 times wrap

Note:1) 6 boxes × 4 layers (maximum 24 boxes) : by ship
6 boxes × 3 layers (maximum 18 boxes) : by airplane
Note:2) This drawing shows marine transportation specification.

Fig.15-2 (c) Packaging Method

DOCUMENT CONTROL SECTION

DATE

EDIT	DATE	DESIG.	CHECK	APPR.	DESCRIPTION
DESIG.			CHECK		APPR.

TITLE FLC44SXC8V

DRAW. NO. Tech Bes LCD-00028

CUST.

FUJITSU LIMITED

SHEET 24/

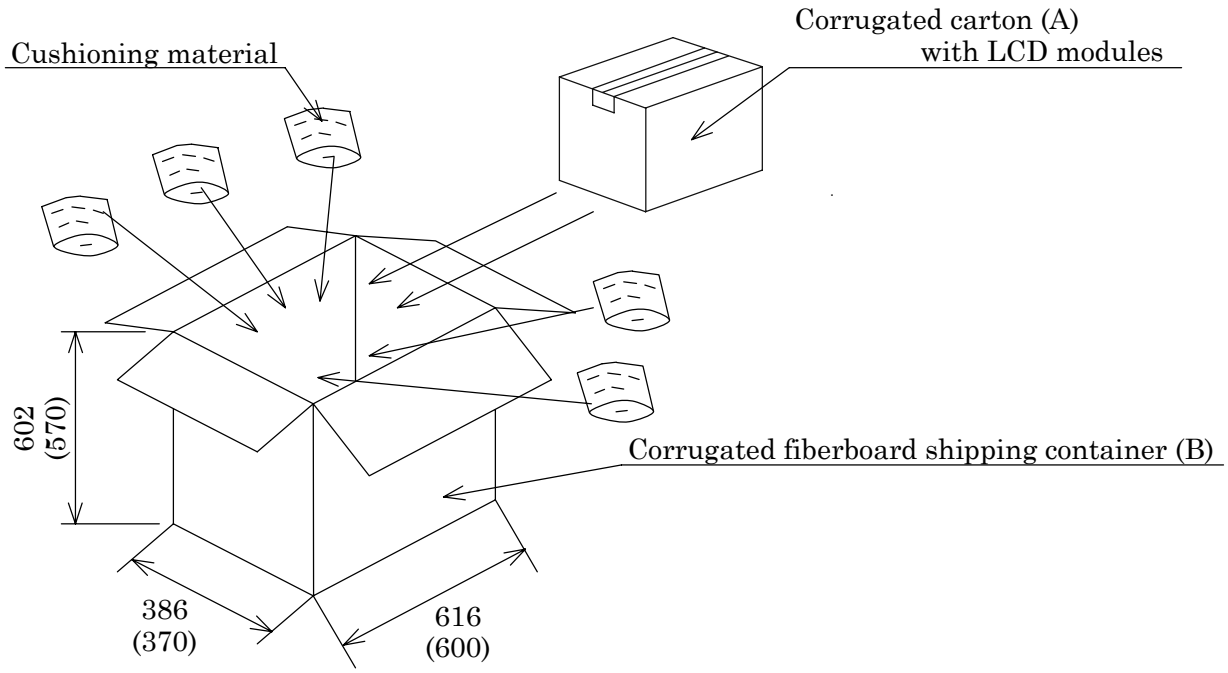

Note 1) The carton (A) should be placed in the middle of the container (B) with enough cushioning materials.

Note2) The figures in ( ) show inside measurements of the container (B).

Figure.15-2 (d) Packing method

DOCUMENT CONTROL SECTION

DATE

EDIT	DATE	DESIG.	CHECK	APPR.	DESCRIPTION
DESIG.			CHECK		APPR.

TITLE FLC44SXC8V

DRAW. NO. Tech Bes LCD-00028

CUST.

FUJITSU LIMITED

16.WARRANTY

The warranty period is one year after shipping. Products which fail during this period are repaired or replaced without charge, unless the failure is caused by user.

17.PRECAUTIONS

Adhere to the following precautions to use this LCD module properly.

(1) Handling of LCD panel

① Do not apply any strong mechanical shock to the LCD panel.

Since the LCD panel is made of glass, excessive shock may damage the panel or cause a malfunction.

② Do not press hard on the LCD panel surface.

In the LCD panel, the gap between two glass plates is kept perfectly even to maintain display properties and reliability. The hard pressure on the LCD panel may cause the following problems.

① Ununiformity of color
② Disorder of orientation of liquid crystal

Problem ① returns to normal condition after a while. Problem ② returns to normal condition by turning the power off and turning on again.
However these operations should be avoided to insure reliability.

③ Do not scratch the polarizer film on the LCD panel surface.

・Do not press or rub the display surface with a hard tool, tweezers, etc.

・For handling, use cotton or conductive gloves so that the display surface is not soiled.

・If dust or dirt soils the display surface, clean it as follows with a soft cloth (deerskin, etc.)

[Dust] Wipe off with a soft cloth. (do not rub.)

[Dirt] Apply clear water to a soft cloth and squeeze hard out of water drops, then lightly wipe off the specified parts. Only if the dirt is hardly wiped off, use isopropyl alcohol or ethanol.

Be careful not to splash the water or the solvents on the edge of polarizer and in the LCD unit.

The polarizer possibly exfoliates due to the solvent and water penetrated between the polarizer and the LCD panel.

Do not use unspecified solvent such as ketone (acetone, etc.) and aromatics (xylene, toluene, etc.)

(Caution) Be careful not to allow the water or solvent to enter the module.

・If saliva or water drops are left for a long period of time, the part may become deformed or discolored.

Wipe off immediately in the same way as for dirt.

・Do not allow oil to adhere to the module since excessive oil is hard to clean.

④ Do not place or contact objects on the display surface for a long period of time.
This may make some parts of the LCD module distorted and the quality of display may deteriorate.

(2) Handling of LCD module

① Do not pull the cold-cathode tube cable strongly.
If the cable is pulled with the strength of 2kg or more, the cable may be damaged or may lose reliability.

② Assemble the module into user's system in a dust free environment.
Conductive foreign matter adheres to the module may cause failures.

③ Take anti-electrostatic measures for assembling the module.

Since the LCD module contains CMOS-ICs, the following points should be observed.

- For assembling the module, operator should be grounded and wear cotton or conductive gloves.
- Floor of work area and work table to assemble the LCD module should be covered with electrostatic shielding in order to discharge static electricity via an earth wire.
- If necessary, ground operation tools (soldering iron, radio pliers, tweezers, etc.).
- Do not take the module out of the conductive bag until the module is assembled.
- Do not assemble the module under low humidity (50%RH or less).

④ Do not pull the connecting cable on the rear face of the LCD module strongly.

⑤ Do not disassemble or remodel the LCD module.
Disassembly or remodeling of the LCD module may result in malfunctions or deterioration of the display quality and reliability.

(3) Precautions in regards of operating the LCD module

① Adhere to the specified power supply sequence.
If not followed, the CMOS-IC may cause a latch-up, or DC voltage may be applied to the liquid crystal, which cause a failure or serious deterioration in display quality.

② Do not operate the LCD module when condensation occurs.
If the LCD module is operated when condensation is on the terminals of the LCD panel, the terminals cause electrochemical reaction, and may reach disconnection. Condensation easily occurs especially when the module is moved from cold environment to warm environment.

DOCUMENT CONTROL SECTION

DATE

EDIT	DATE	DESIG.	CHECK	APPR.	DESCRIPTION
DESIG.			CHECK		APPR.

TITLE FLC44SXC8V

DRAW. NO. Tech Bes LCD-00028 CUST.

FUJITSU LIMITED SHEET 27/

③ The following troubles occur when the LCD module is not used under recommended temperature.

・Operation under high temperature(>50℃): Display colors shift to blue.

・Storage under high temperature(>60℃): The polarizer film deteriorates and contrast decreases.

・Operation under low temperature(< 0℃): The response speed decreases considerably.

・Storage under low temperature(<-20℃): The liquid crystal may solidify and become damaged.

④ Be sure to input the control signals at the correct timing.
If control signals (DCLK, ENAB) are not input, or if the timing is out of the specified timing, DC voltage may be applied to the liquid crystal and, as a result, cause image sticking or deterioration of contrast.

(4) Precautions in regards of designing module mounting

① Excessive force should not be applied to the screen or the rear side of the LCD module.
Excessive pressure on the screen caused by the installation of the LCD module may deteriorate display quality and reliability.
Brightness uniformity and the reliability of CCFL may decrease if the pressure is applied to the backlight module.

② Avoid twisting and bending the LCD module.
Excessive twist and bend may damage display quality and reliability.

③ Avoid extending the power cable between the LCD module and inverter.
This may cause the backlight to flicker or not to light.

④ Keep the backlight cable apart from the metal enclosure of the LCD module.
When frequency current for backlight driving leak to the metal enclosure, the desired brightness may not be assured.

⑤ When Mounting LCD module with M3 screws (x4), tighten the screws with torque below 4.5kgf.

⑥ When connecting CN-1 with M3 screws (x2), tighten the screws with torque below 2kgf.

(5) Storage method

① Do not store the LCD module in an atmosphere of organic solvent or corrosive gas.
In an organic solvent atmosphere, the polarizer film discolors and display quality deteriorates.
In a corrosive gas environment, various parts of the module may corrode or deteriorate.

② Store the LCD module in a Fujitsu package.
At storing, Fujitsu packages can be stacked up to 3 boxes.
The LCD module is in an anti-static bag. Keep the module in that status.

③ The LCD module is recommended to be stored in humidity controlled, cool and dark locations.

Recommended storage environment

- ・Place : Dark (avoid direct sunlight)
- ・Temperature : 10～35℃
- ・Humidity : 50～60%RH

Note) If the module is left in an environment of 60℃ and above for a long period of time, optical characteristics may deteriorate.

(6) Disposal Method

① LCD module

The components of this LCD module can be grouped into metal, resin, glass and so on. As the backlight contains CCFL which includes mercury, it must be disposed according to the local ordinance or regulations.

② Package

All the packages are made of recyclable papers except the anti-ESD bag.

(7) Others

① If the LCD panel is damaged, do not inhale and do not swallow the liquid crystal.

If the liquid crystal adhere to the body or cloths, wash it off with soap immediately.
Follow regular precautions for electronic components.

② Flux residue on the printed circuit board is harmless to the quality and reliability of LCD module.

Fujitsu has adopted non-wash technology on module assembly process.

18.OTHERS

Specifications of the TFT-LCD panel and other components used in this LCD module are subject to change.

Both parties shall discuss together and make the best effort to reach agreement in case of the rising of any doubt to the contents of the specifications.

This LCD module is not designed for the purpose where high reliability is required, such as for aero-space equipment, control system of nuclear power and medical life-support equipment.

DOCUMENT CONTROL SECTION

DATE

EDIT	DATE	DESIG.	CHECK	APPR.	DESCRIPTION

DESIG. CHECK APPR.

TITLE FLC44SXC8V

DRAW. NO. Tech Bes LCD-00028 CUST.

FUJITSU LIMITED SHEET 29/

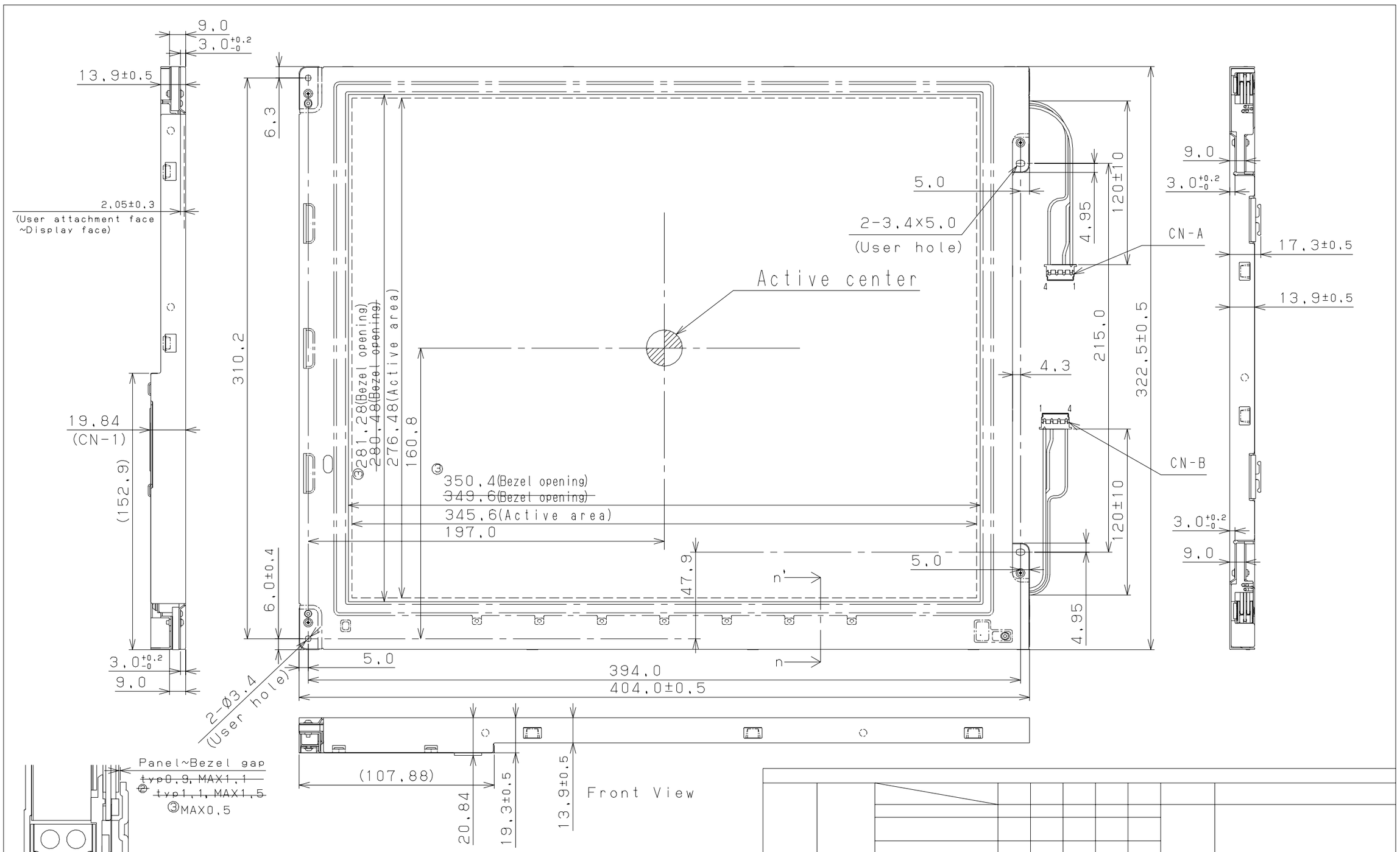

Fig.19(a) Outward Appearance

NOTE
1) Unspecified tolerrance to be ±0.5

| | | |

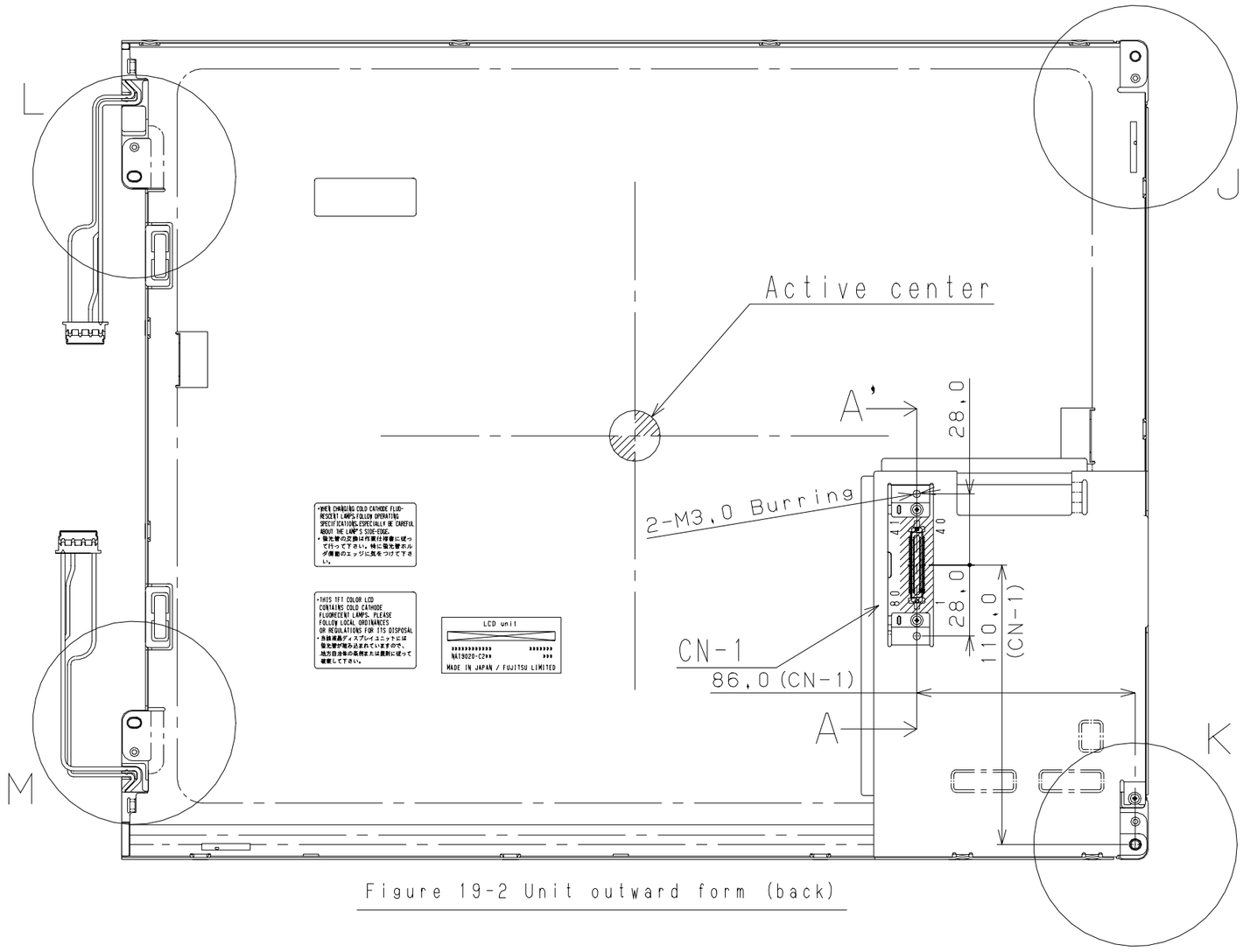

Figure 19-2 Unit outward form (back)

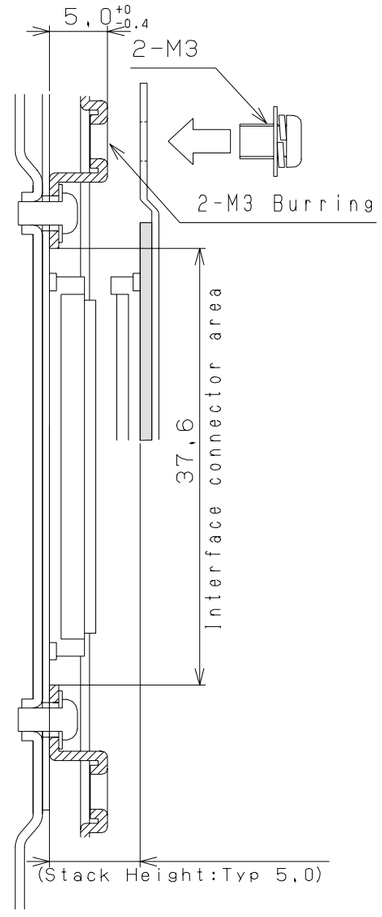

A-A' Cross section

NOTE
2) ▨ is the area of interface connector.
3) The height of interface connector does not include that of a counterpart connector.

EDIT.	DATE	DESIG.	CHECK	DESCRIPTION
DESIG.			CHECK	APPR.

TITLE FLC44SXC8V
DRAW. NO. Tech Bes LCD-00028
SHEET 31 /

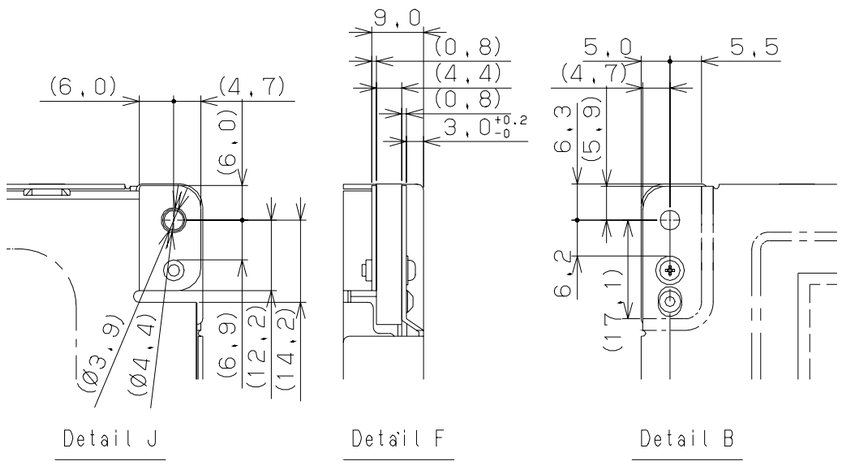

Detail J　　Detail F　　Detail B

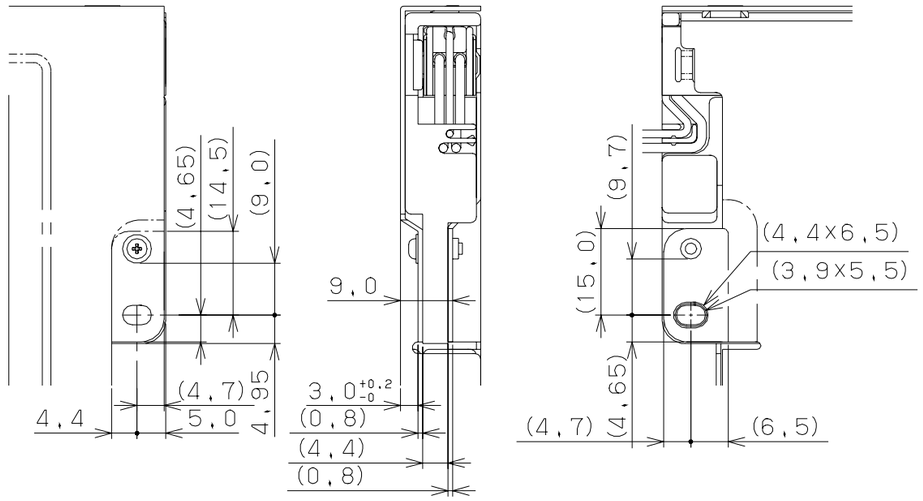

Detail D　　Detail H　　Detail L

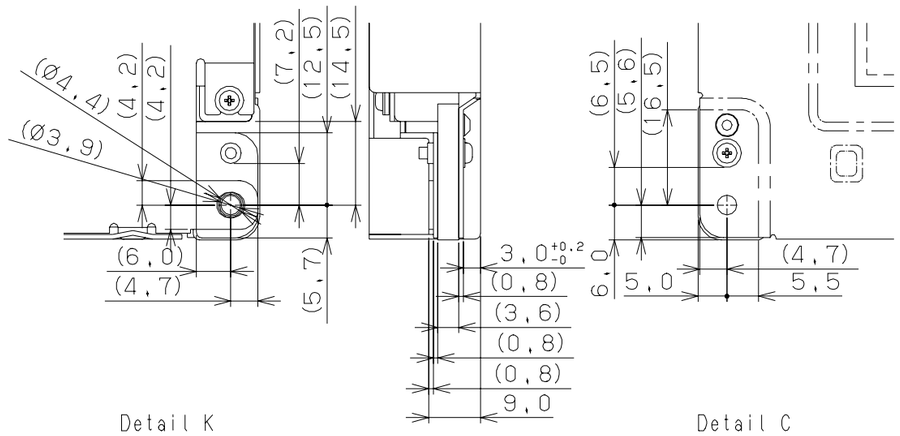

Detail K　　Detail G　　Detail C

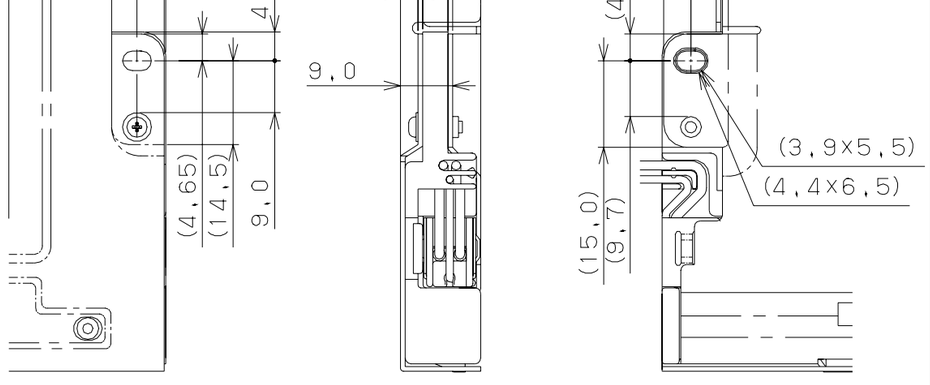

Detail E　　Detail I　　Detail M

Figure 19-3 Unit outward form (detail)

NOTE
4) This page is referende.
(Not guarantee)

EDIT.	DATE	DESIG.	CHECK	DESCRIPTION			
DESIG.			CHECK			APPR.	

TITLE FLC44SXC8V
DRAW. NO. Tech Bes LCD-00028
SHEET 32/32